DMMC-Stamp Overview

MTCA workshop for accelerator and physics in Japan 2021

DESY MMC System on Module "DMMC-STAMP"

In MicroTCA architecture,
MCH and AMCs are comunicated and management by MCMC and MMC.

Figure 3-5 Example of Shelf Manager located with Carrier Manager

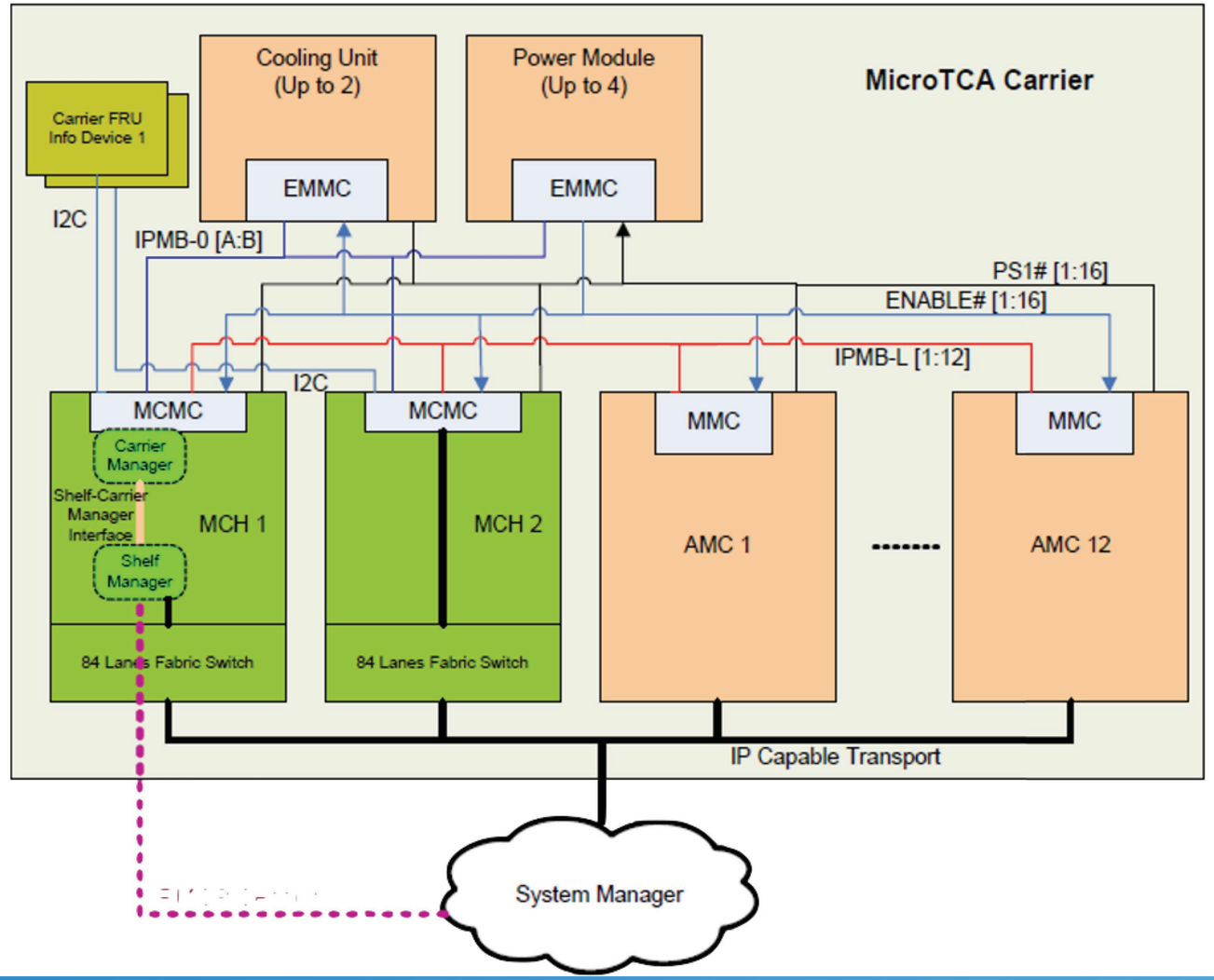

DESY MMC System on Module "DMMC-STAMP"

HIGH LIGHTS

- DMMC-STAMP provides a complete solution to manage the target board including power system, FPGAs, JTAG and RTM.
- Ready-to-use solder-in component based on ARM Cortex-M4 processor
- For basic operation no external components are req (just only handle and LEDs).
- Flexible CPLD for FPGA update and control (variable IO voltage)
- Pre-programmed component with HPM Firmware-update support.

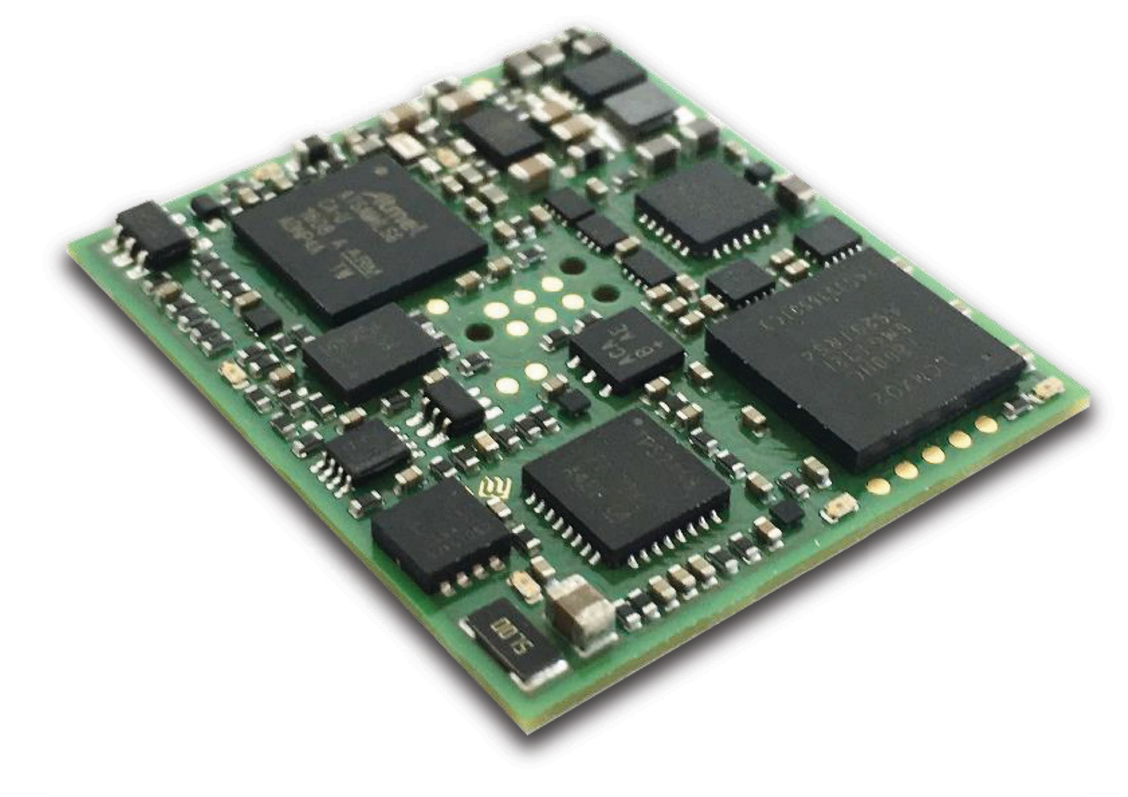

Actual Size

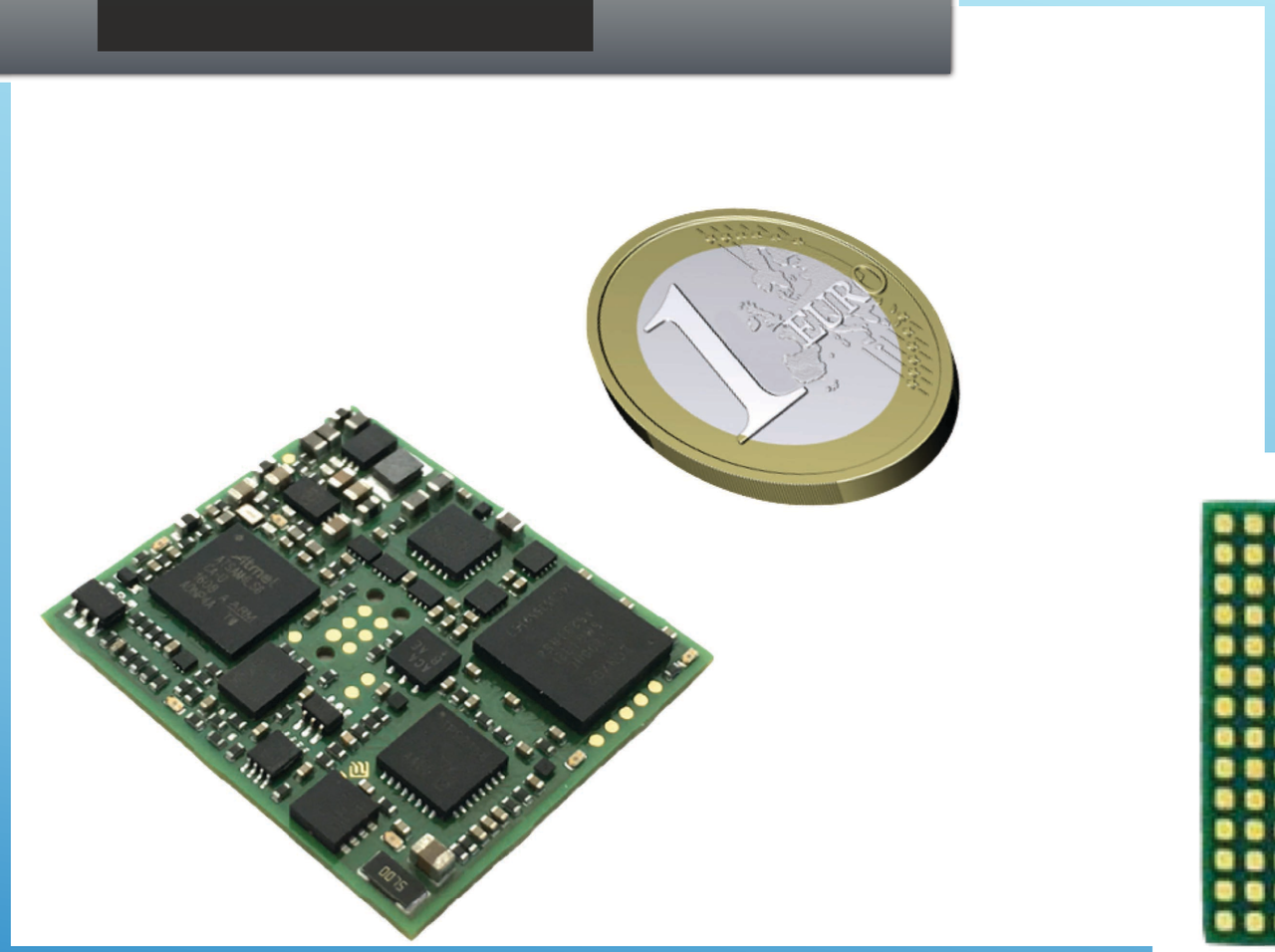

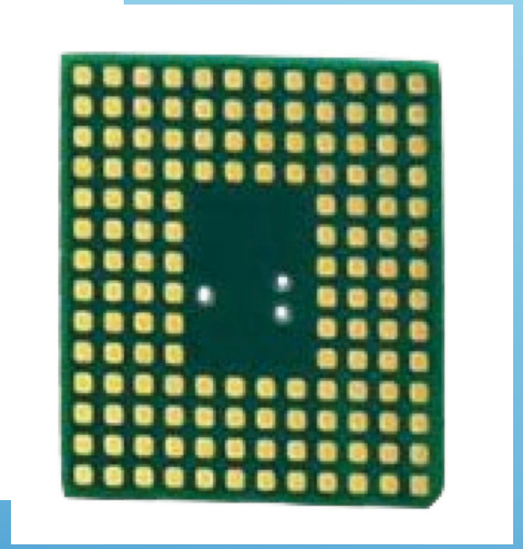

25.5mm x 29.5mm x 2.3mm

Implementation

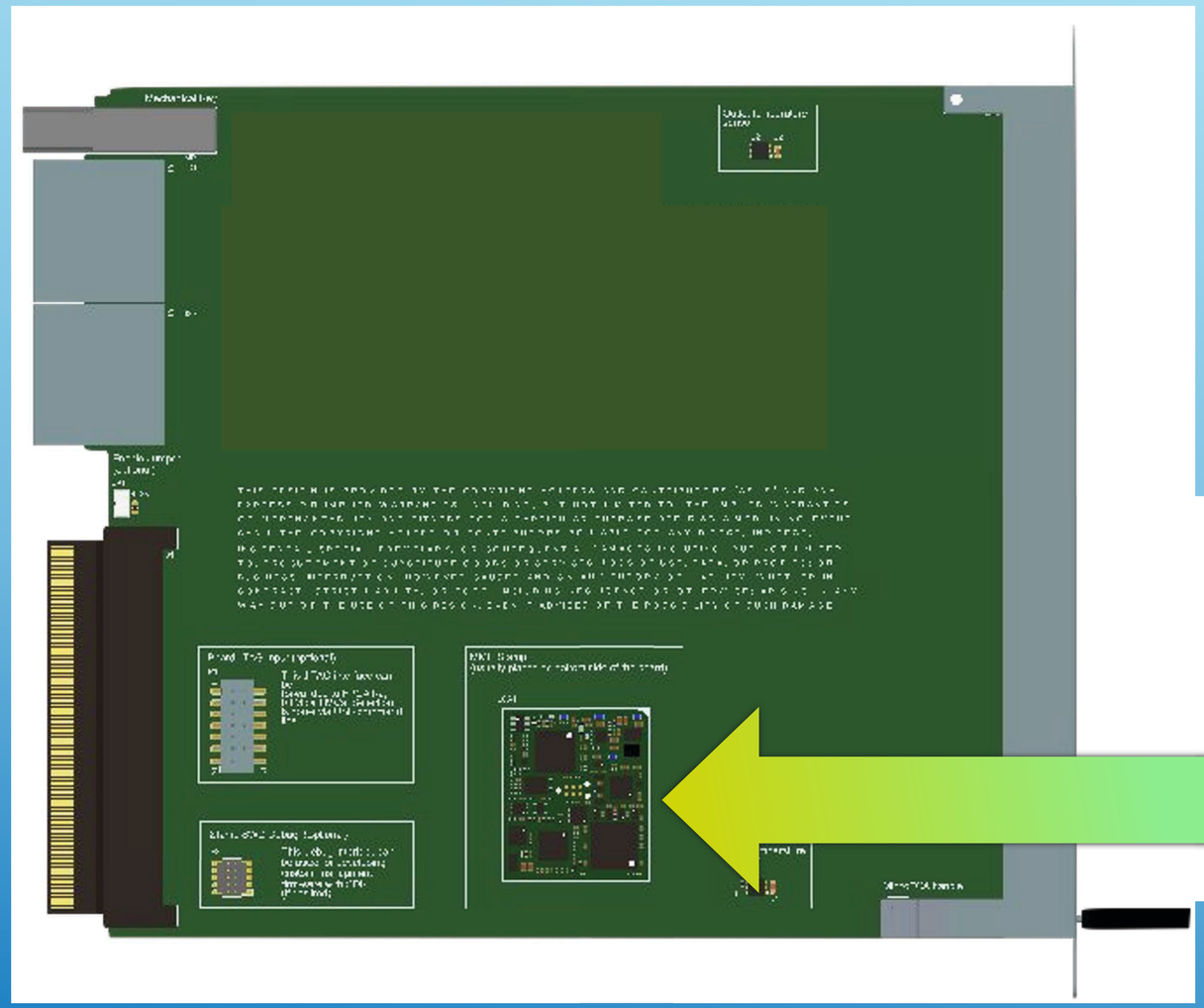

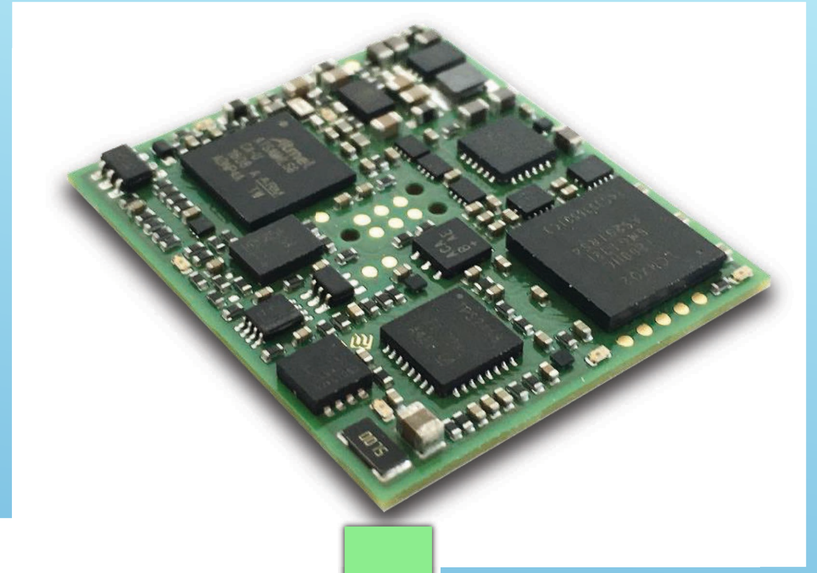

LGA (Land Gred Array) Footprint

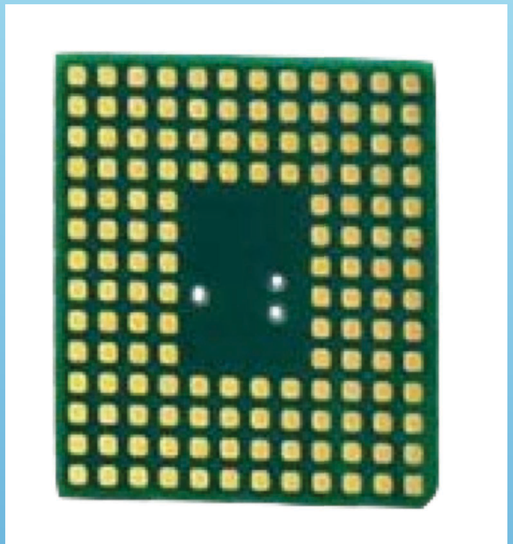

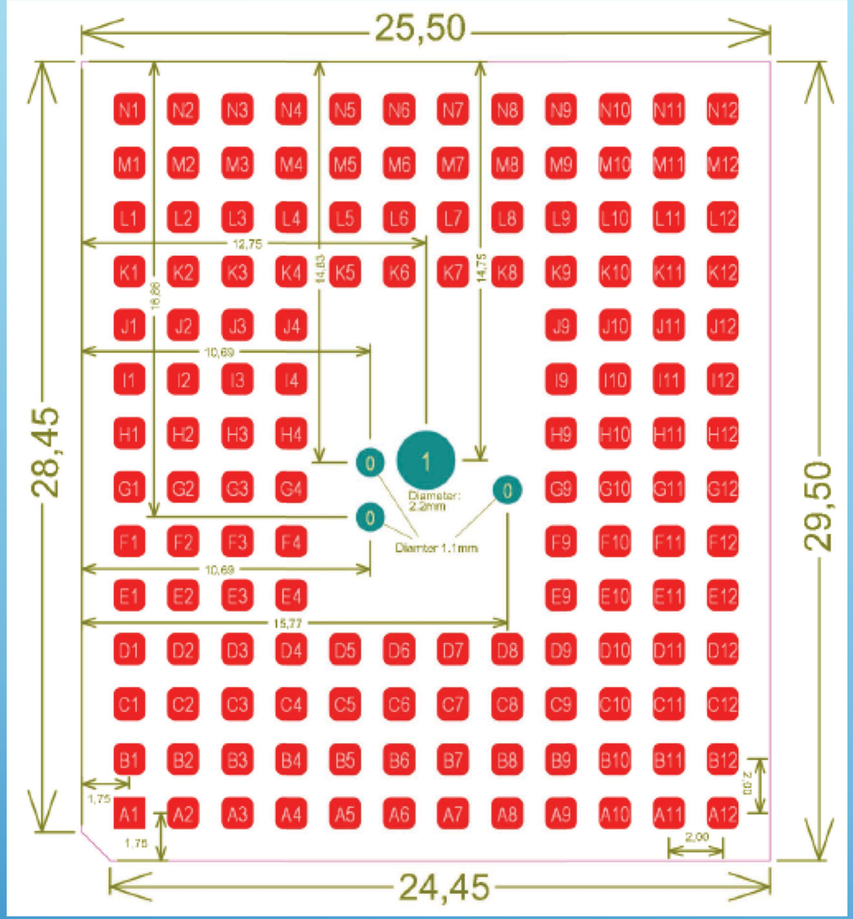

FEATURES

- Full IPMI handring
  (MCH communication,
  LEDs, AMC/RTM power, FRU read/write)
- 2kBit EEPROM with unique ID
  (MAC address)
- Complete AMC power management via PmBUS
- Board failure handling
  (over-current/over-temperature)

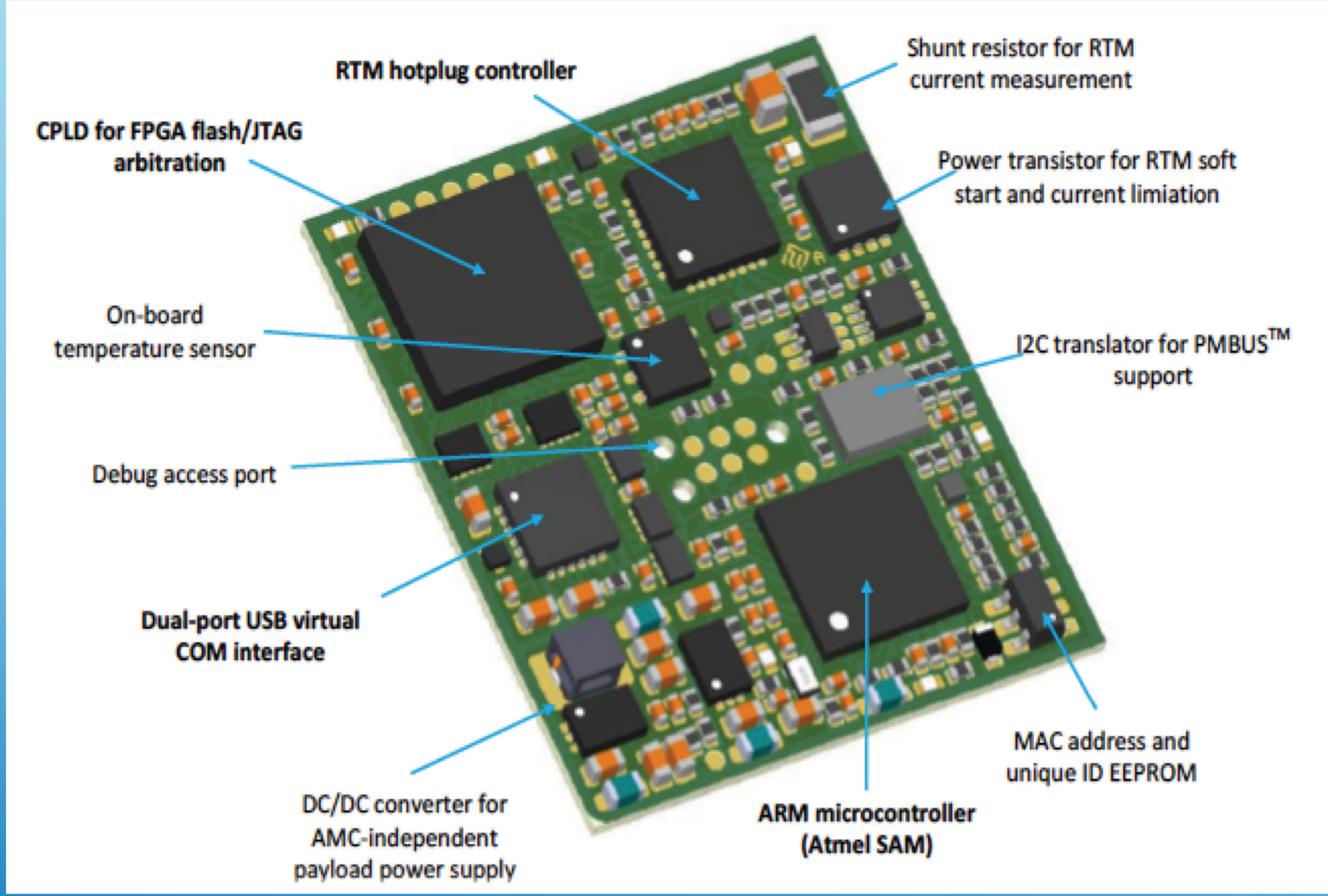

FEATURES

- Supports two FPGA interfaces including IPMI firmware update
- Control of up to two FMC modules
- Re-configurable JTAG chain management
- USB virtual COM port for MMC and FPGAs
- Pre- programmed firm ware can be modified with optional SDK
- Breakout Board available

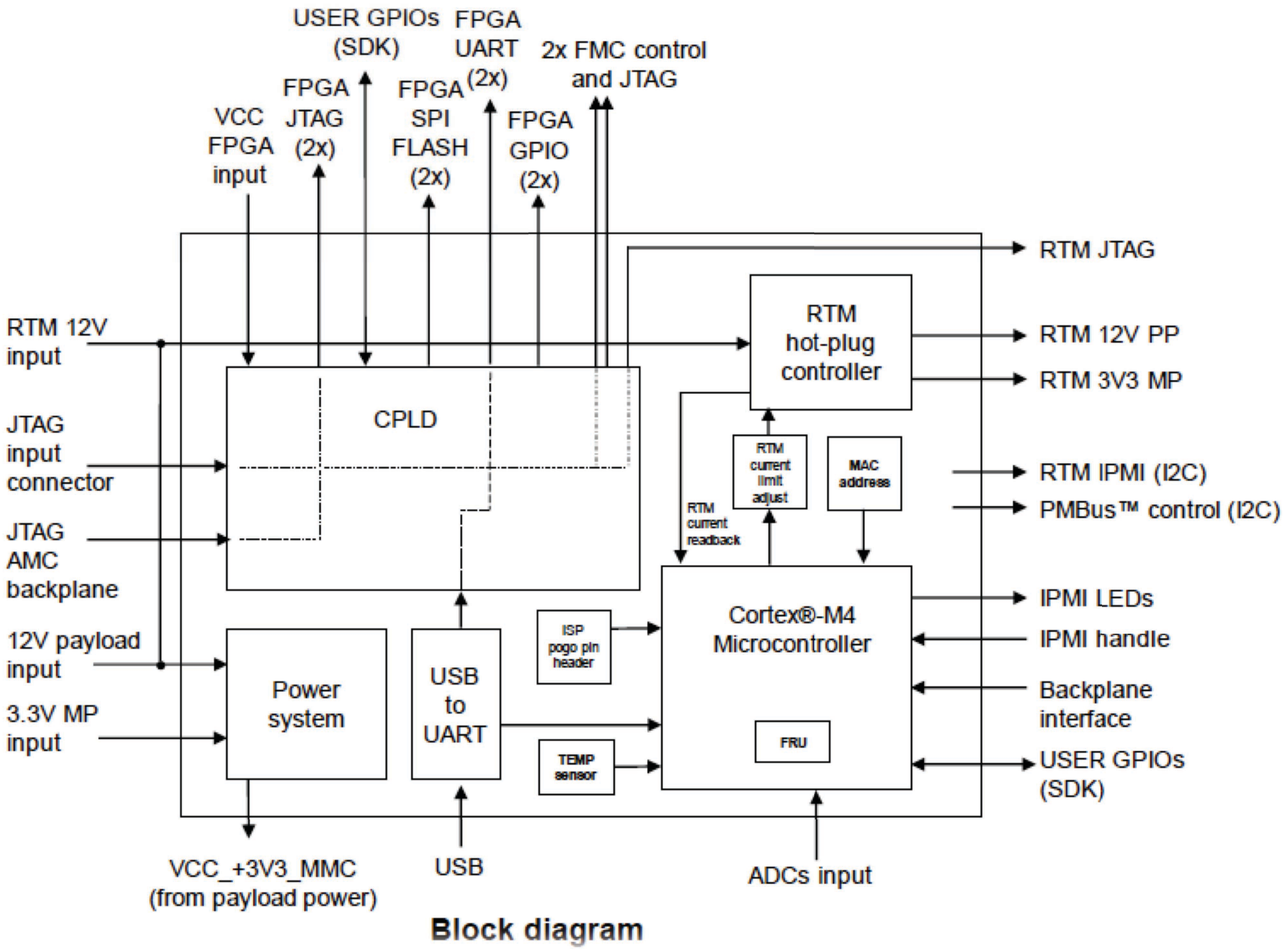

Block diagram

DMMC-STAMP-Brakeout Board

HIGH LIGHTS

The board provides the elements that are required by the MicroTCA standard such as IPMI LEDs and Hot-plug handle as well as optional elements to demonstrate the capabilities of the DMMC-STAMP module.

Complies with
PICMG AMC.0 Revision 2.0,
PICMG MicroTCA.0 Revision 1.0
PICMG MicroTCA.4 Revision 1.0.

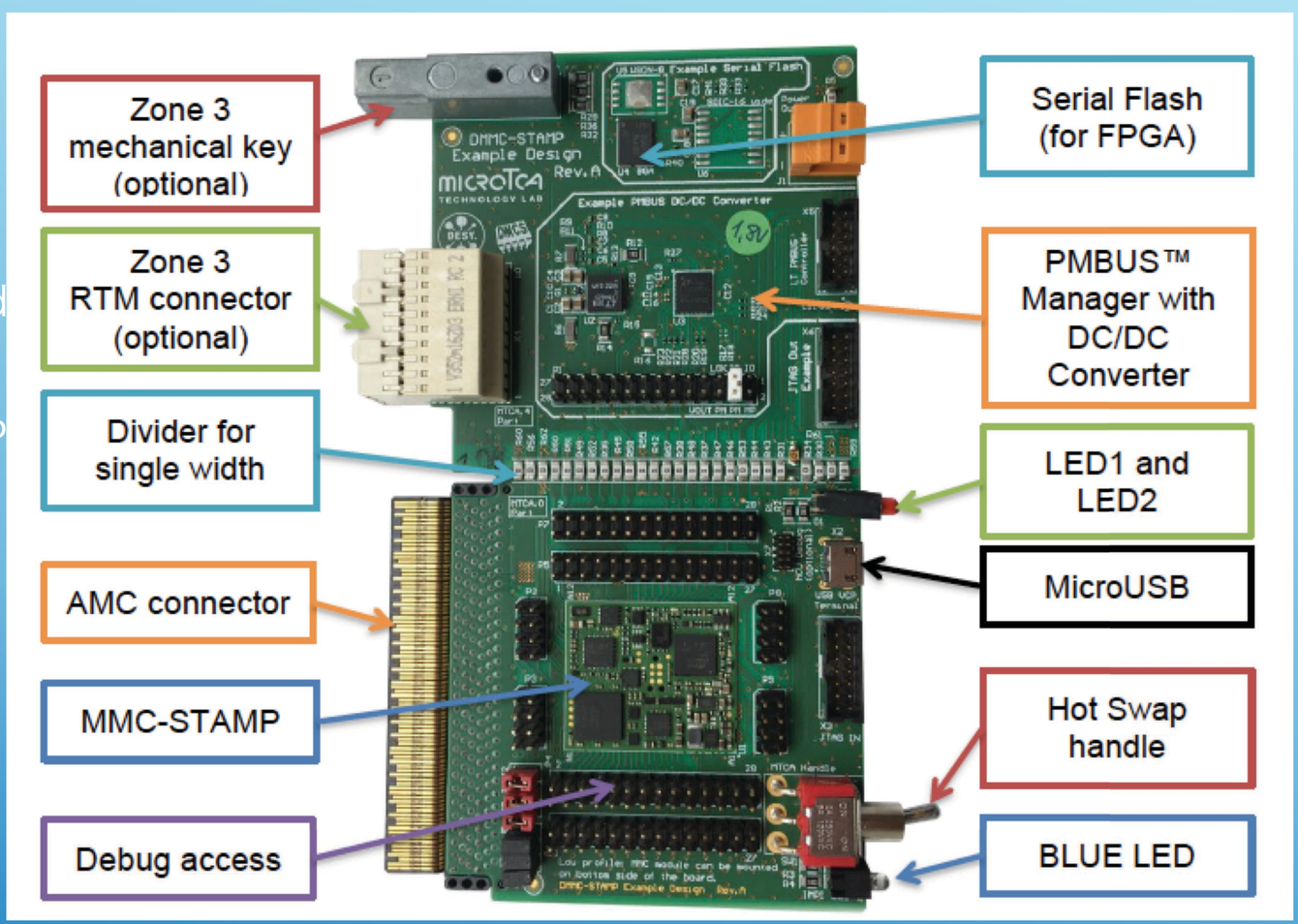

W-IE-NE-R
A Phoenix Mecano Company

EMBECK®

1000W MTCA.4
Low Noise Power Supply

MTCA workshop for accelerator and physics in Japan 2021

Main Features

- 1000W power supply according to MTCA.4 standard
- Efficiency: 89%
- Low noise and ripple : < 4mV peak to peak (0 - 20MHz)
  < 40mV peak to peak (0 - 350MHz)
- Minimized crosstalk which protects sensitive AMCs against loadchanges by fans or other AMCs
- Wide range AC input 90 - 264 VAC / 50 - 60 Hz
- Integrated MTCA.4 Digital Power Controller
- DC Outputs:
  16 channels 12V/8.4A (payload power) max. 1000W total
  16 channels 3.3V/0.2A (management power)
- USB interface for remote monitoring/control
- Hotswap Button
- MTCA.4 Double height - double width size

Front panel controls and indicators

Fault LED and Hotswap Button

Micro USB port for remote monitoring

PFC and Status LEDs

Exchangeble main fuse

Rear panel controls and indicators

Micro USB socket for firmware restoration independedt from the MTCA.4 crate environment

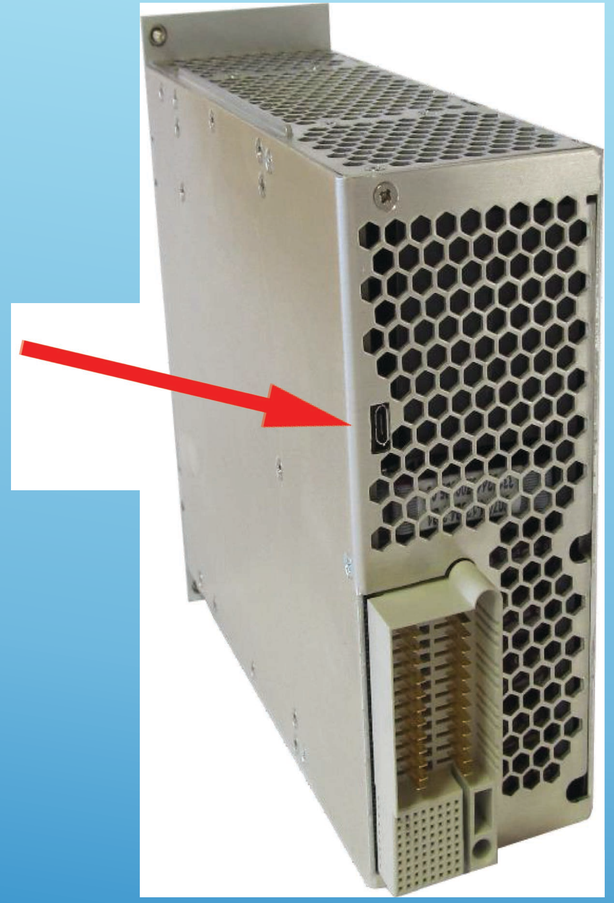

About us – EMBECK –

Embeck Co.,Ltd.

Established : Apr. 2011
Location : Shinagawa, Tokyo

Distributor of following companys

- DESY microTCA Technology LAB
- W-IE-NE-R
- SEVEN Solutions
- HEITEC
- Jasper Electronics

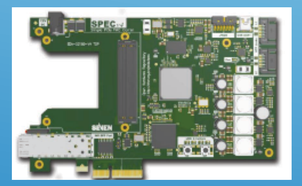

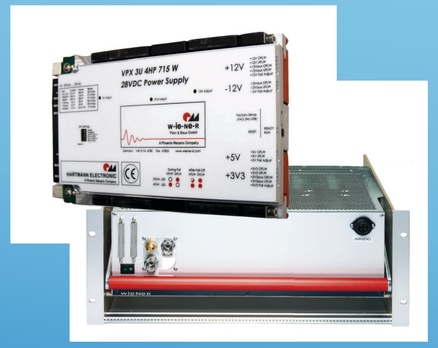

About us – EMBECK –

Embeck Co.,Ltd

And, we provide the engineering solution f

- MicroTCA.4
- compactPCI
- Open VPX
- VME
- NIM / CAMAC crates

“Thank you Danke schön ありがとうございました”

Please contact us - Embeck Tomo & Fumi

sales@embeck.jp
www.embeck.jp