4th Generation NAT-MCH

KEK µTCA workshop 2021

Herbert Erd

Presentation 3

NAT-MCH-Gen4 - Building blocks

- Fat-Pipe HUB Modules
  - 1/10/40 GbE
  - PCIe x48/x80 Gen 3-5
  - Fat-Pipe Uplink options
- Clock-Module (IEEE 1588)
  - With /without OXCO
- Base Board
  - Multi Core ARM SoC
  - Base Board Ethernet
  - Base Board Uplink

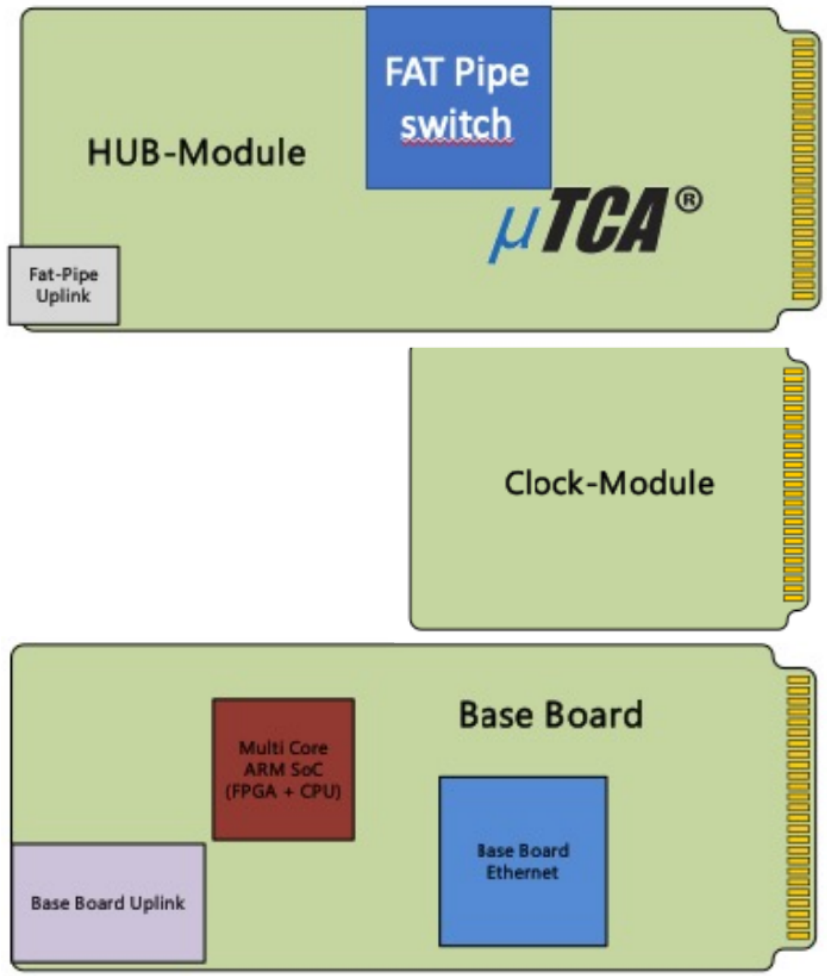

Base Board - Block Diagram Base Board

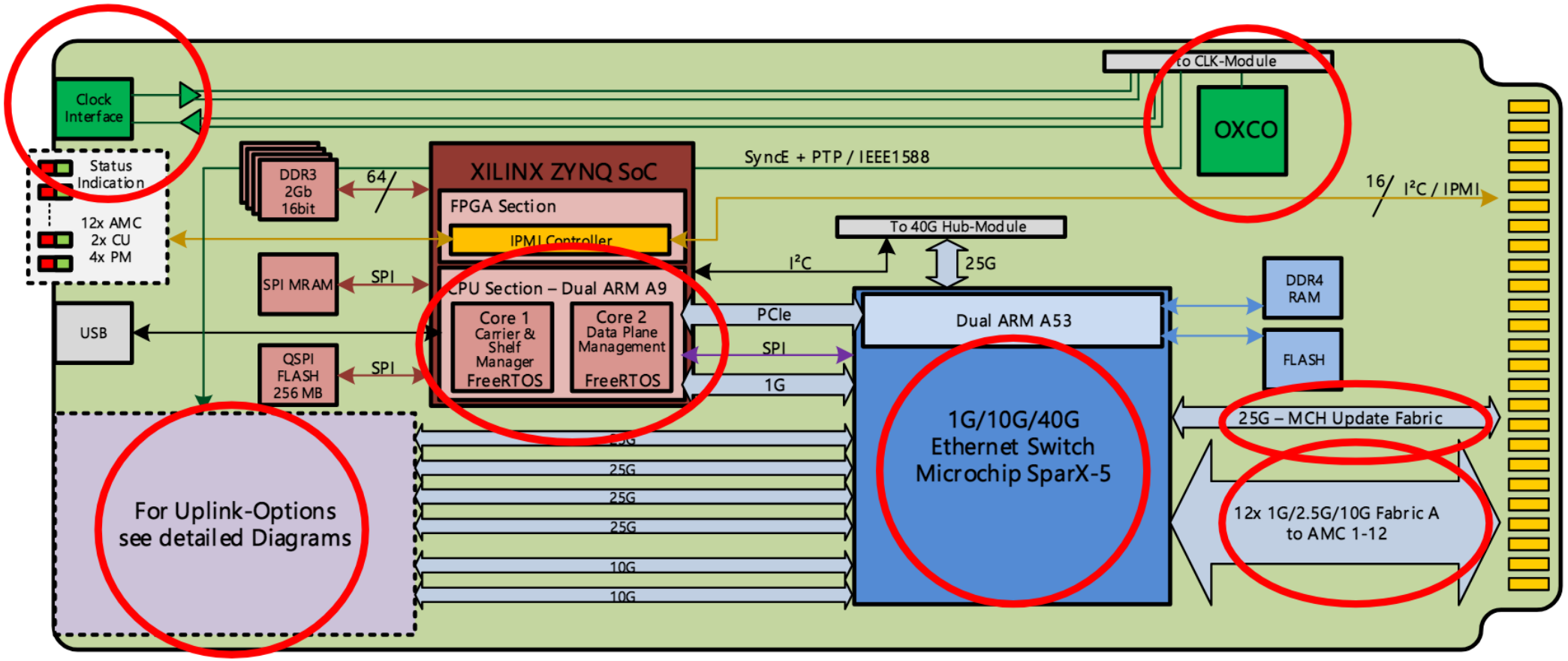

Base Board Uplink with Triple choice

- Option #1: **SFP(-DD)**
  - 1-25G
  - Optical / Copper via SFP
- Option #2: **ix**
  - 1-10G (10GBASE-T)
  - Copper
- Option #3: **RJ45**
  - 1-10G (10GBASE-T)
  - Copper

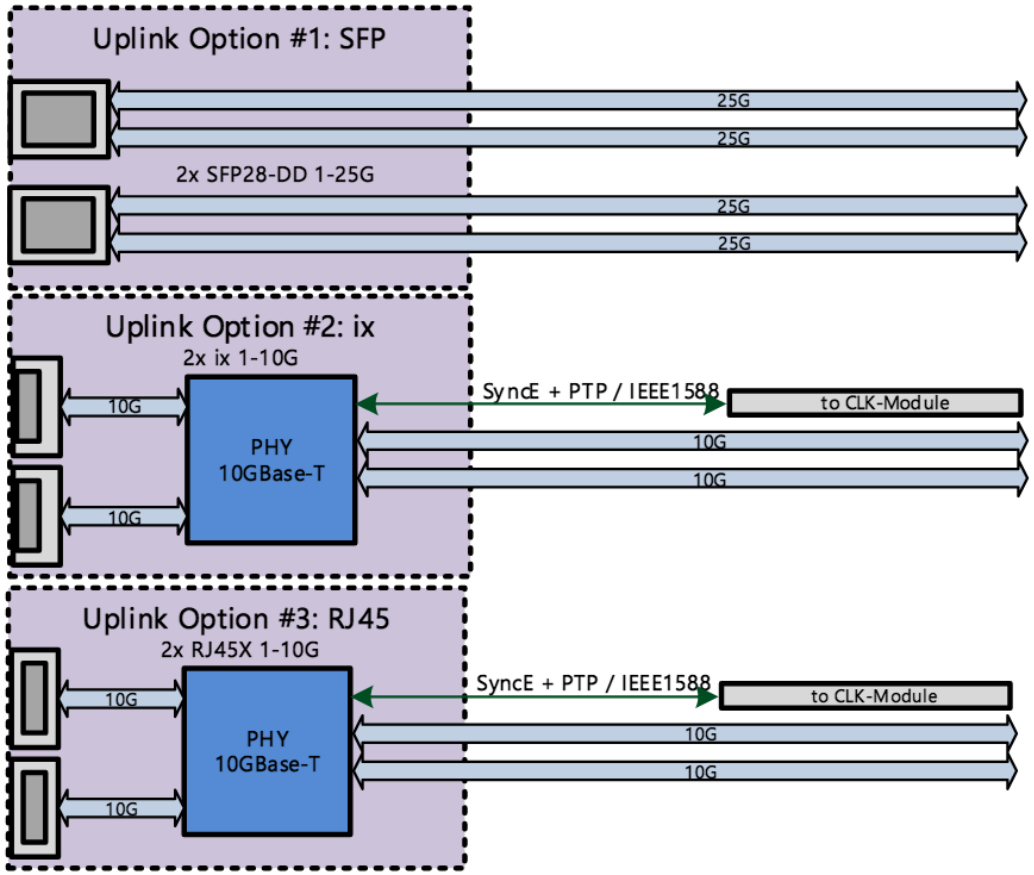

Clock Module

- PLL synthesizer and dedicated FPGA
  - several options of switching
  - Several option for clock manipulation
    - IEEE 1588 Support
    - Synchronous Ethernet Support
    - 2 low-Jitter Clock mux offer CLK1 and CLK2 to each AMC
    - 3rd mux for CLK3 or PCIe Reference Clock
    - GPS via SMA as option
    - OCXO as option (on Base Board)

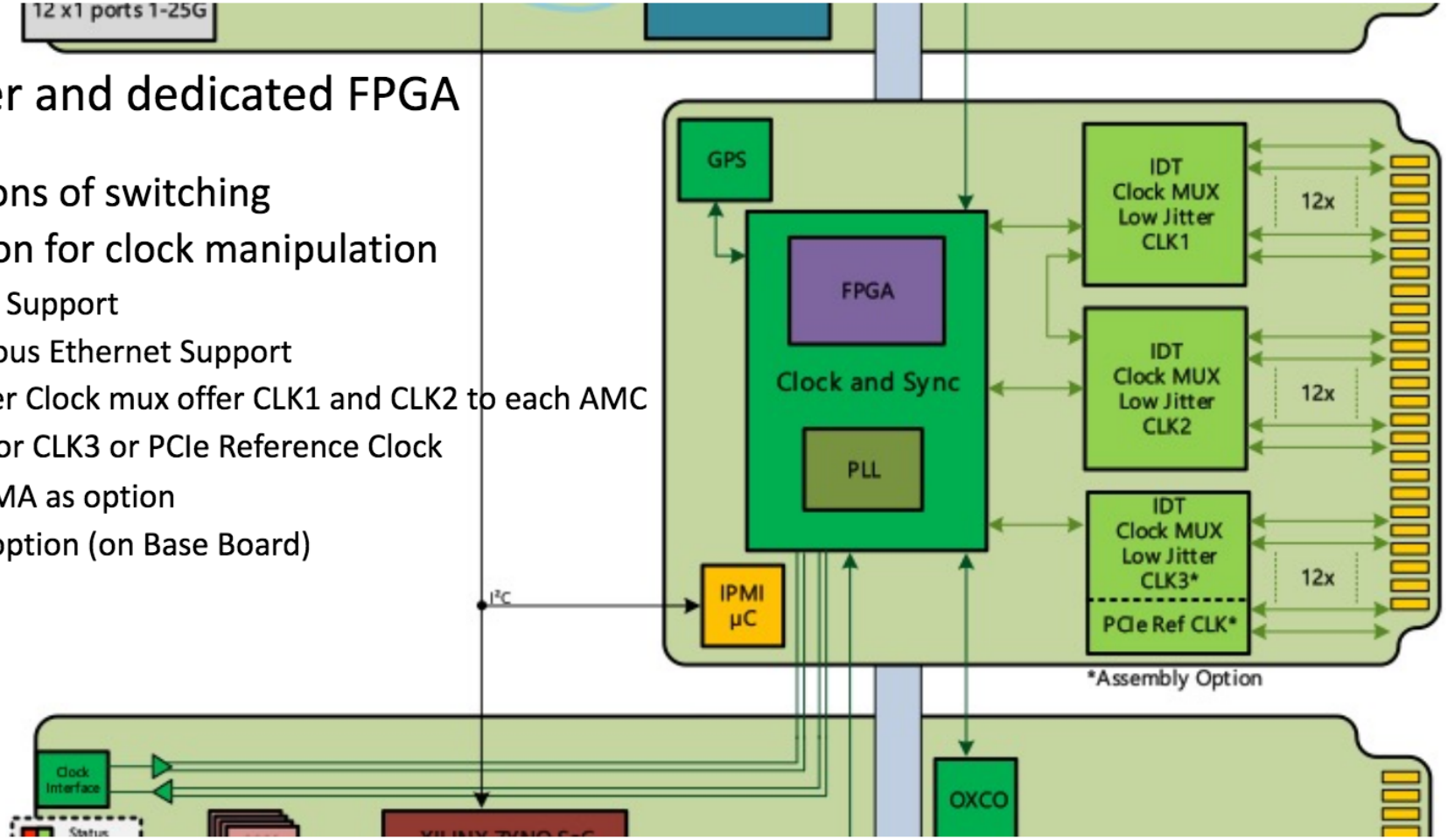

Hardware combination NAT-MCH-G4

- New baseboard can work stand-alone
  - as Managed L2 / L3 switch
  - with new clock module
  - with new NAT-HUB-E(Ethernet) w/o spacer
  - with new NAT-HUB-P(PCIe)
- clocks module provides IEEE 1588 support
  - support for external clock & trigger (GPS)
  - IEEE1588 Support
  - Synchronous Ethernet
  - TSN (Time-Sensitive Networking) Switch
- NG-MTCA has impact to our roadmap

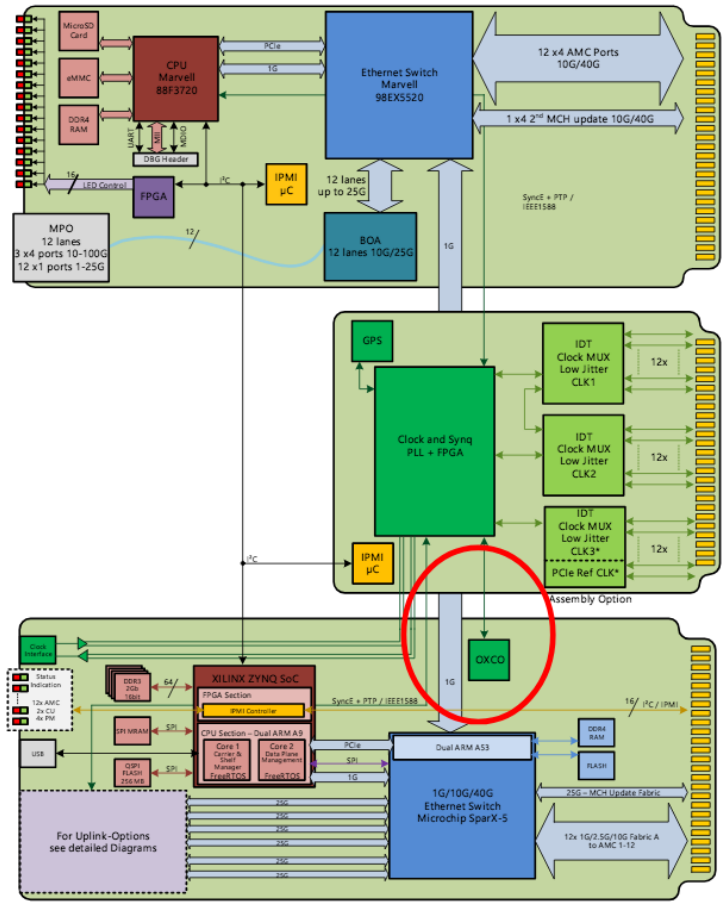

NAT-MCH-G4 – front panel view

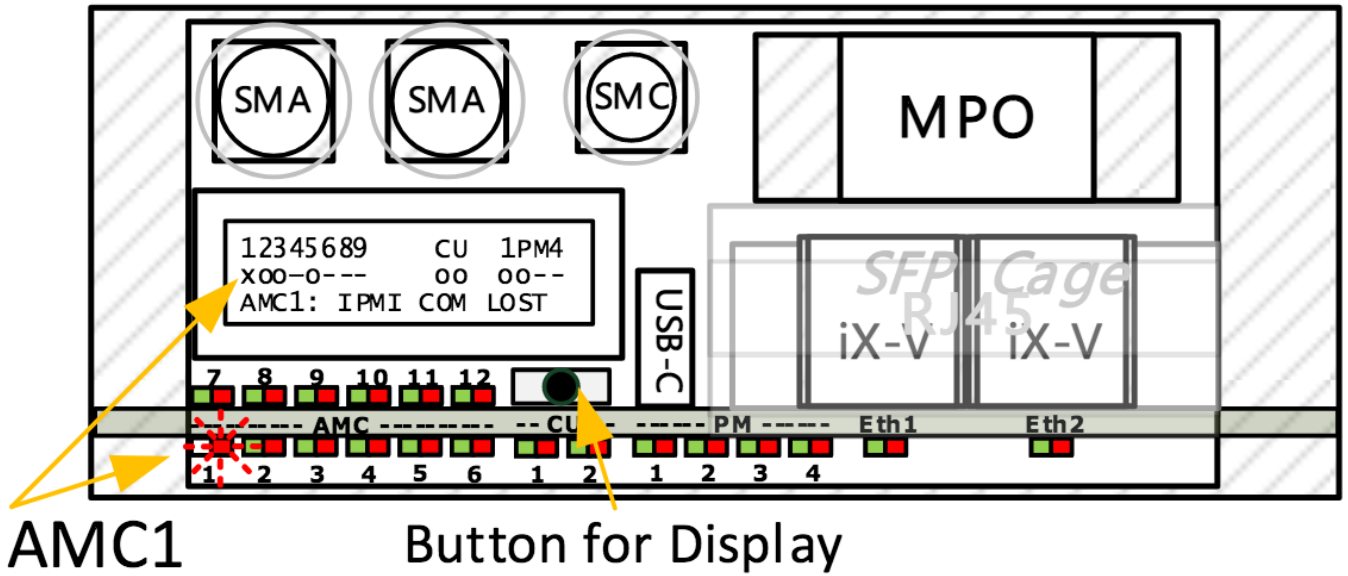

- USB-C for serial terminal: debug + info + configuration
- Basic status indication via red/green LED
- Optional: OLED display for additional info

Roadmap and Timeline NAT-MCH-G4

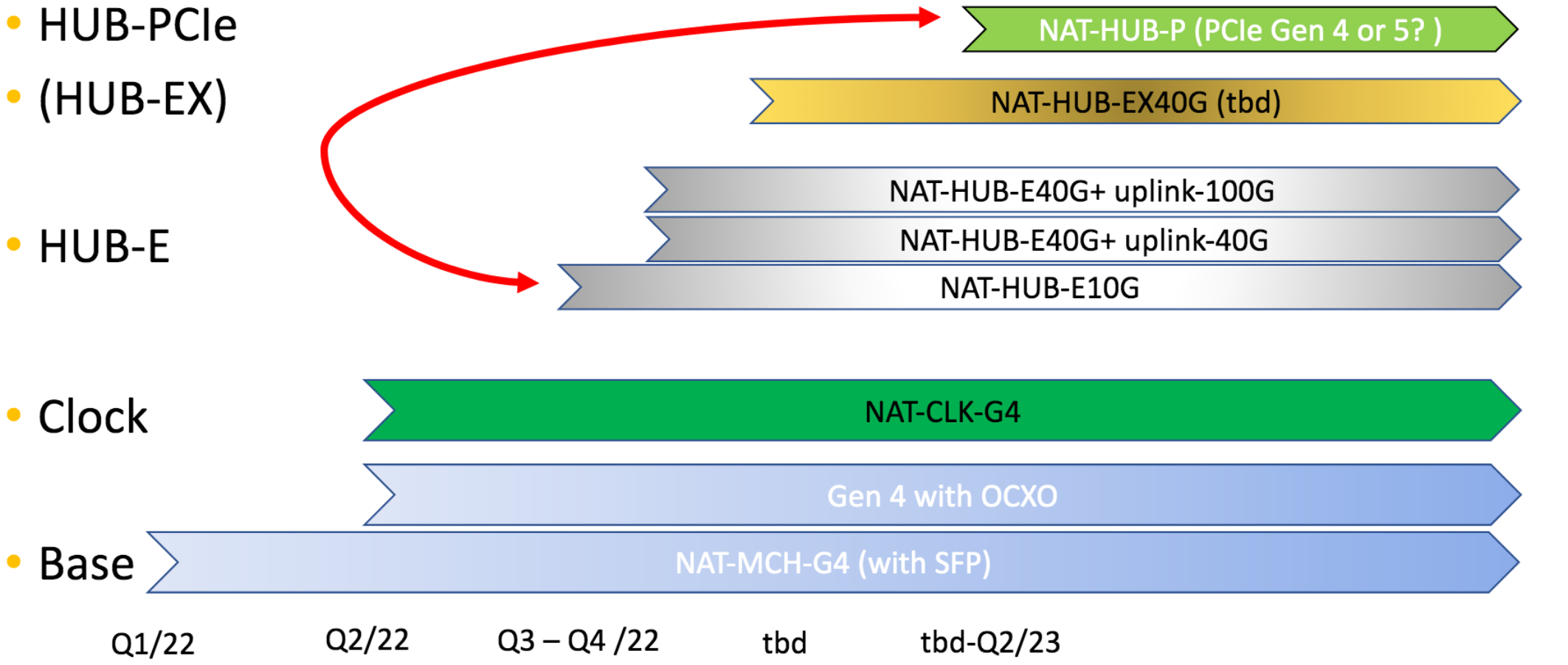

Thank you very much!

Herbert Erd
Strategic Business Development Manager
herbert.erd@nateurope.com
Tel: +49 228 965 864-42
Mob: +49 172 521 6162

or

Akira Sato
StarBridge, Inc.
sato@starbridge.to.jp
Tel: +81-42-521-7081

N.A.T. GmbH
Konrad-Zuse-Platz 9
53227 Bonn
Germany

www.nateurope.com